EUROSYSTEM
MARKET
INFRASTRUCTURE
PLATFORM

BANCA D'ITALIA EUROSISTEMA
BANCO DE ESPAÑA Eurosistema
BANQUE DE FRANCE EUROSYSTÈME
DEUTSCHE BUNDESBANK EUROSYSTEM

Central liquidity management

User detailed functional specifications

Author 4CB

Version 0.1

Date 24 April 2018

All rights reserved.

Table of contents

1 Overview CLM service ... 8

2 Parties, accounts and currencies ... 9

2.1 General information on reference data ... 9
2.1.1 Concept of parties and participants ... 9
2.1.2 Hierarchical party/participant model ... 9
2.1.3 Configuration of parties/participants ... 9
2.1.4 Party/participant identification ... 9
2.1.5 Reference data for parties/participants ... 9

2.2 CLM related reference data ... 9
2.2.1 Participation types ... 9
2.2.1.1 Direct participation in CLM ... 9
2.2.1.2 Multi-addressee access ... 9
2.2.1.3 Access as correspondent BIC ("addressable BIC") ... 9
2.2.2 Accounts structure and organization ... 9
2.2.2.1 Categories of accounts ... 9
2.2.2.2 Main cash accounts ... 9
2.2.2.3 Transit accounts ... 9
2.2.2.4 Links between MCAs and DCAs ... 10
2.2.2.5 Account monitoring group, liquidity transfer group and whitelist ... 10
2.2.3 Blocking ... 10
2.2.3.1 General aspects ... 10
2.2.3.2 Blocking of a party or a cash account in CLM ... 10
2.2.4 Concept of currencies in CLM ... 10
2.2.5 CLM directory ... 10

3 Access to CLM ... 11

3.1 Connectivity (A2A/U2A) ... 11

3.2 Authentication and authorisation ... 11
3.2.1 Authentication and authorisation concepts ... 11
3.2.2 Instructing scenarios ... 11

3.3 User roles and access rights ... 11

3.4 Message subscription ... 11

3.5 Graphical user interface ... 11

3.6 Security ... 11

4 Business day ... 12

5 Operations and support ... 13

All rights reserved.

5.1 Business application configuration ... 13
5.2 Calendar management ... 13
5.3 Business day management ... 13
5.4 Business and operations monitoring ... 13
5.5 Archiving management ... 13
5.6 Trouble management ... 13

6 Application processes description ... 14

6.1 Settlement of payments linked to CBOs ... 14
6.1.1 Overview ... 14
6.1.2 Definition of execution time ... 14
6.1.3 Warehouse functionality ... 15
6.1.4 Flow of payments ... 16
6.1.4.1 Payments initiated by central bank ... 16
6.1.4.1.1 Credit transfer ... 16
6.1.4.1.2 Direct debit ... 20
6.1.5 Rejection of payments ... 24
6.1.5.1 Technical validations ... 26
6.1.5.2 Business validations ... 26
6.1.6 Amendment of payments ... 26
6.1.7 Revocation of payments ... 29
6.1.8 Processing of payments ... 29
6.1.8.1 Entry disposition ... 29
6.1.8.2 Comprehensive queue management ... 29
6.1.8.3 Dissolution of the payment queue ... 29

6.2 Liquidity management ... 29
6.2.1 Available liquidity ... 29
6.2.2 Liquidity transfer ... 29
6.2.2.1 Overview ... 29
6.2.2.2 Initiation of liquidity transfers ... 29
6.2.2.3 Liquidity transfer process ... 29
6.2.2.3.1 Liquidity transfer from CLM MCA to settlement service ... 29
6.2.2.3.2 Liquidity transfer from settlement service to CLM MCA ... 29
6.2.2.3.3 Liquidity transfer between two CLM MCAs ... 29
6.2.2.3.4 Liquidity transfer between two DCAs in different settlement services . 29
6.2.2.3.5 Rejection of liquidity transfer orders ... 29
6.2.3 Liquidity management features ... 30
6.2.3.1 Liquidity reservation ... 30
6.2.3.1.1 Overview ... 30
6.2.3.1.2 Liquidity reservation process ... 30

All rights reserved.

6.2.3.1.3 Effect of liquidity reservation ... 30
6.2.3.2 Floor/ceiling ... 30
6.2.3.2.1 Definition of floor/ceiling threshold ... 30
6.2.3.2.2 Breach of floor/ceiling threshold - notification ... 30
6.2.3.2.3 Breach of floor/ceiling threshold - automatic liquidity transfer ... 30
6.3 Reserve management ... 30
6.3.1 Overview ... 30
6.3.2 Reserve management process ... 30
6.4 Standing facilities management ... 30
6.4.1 Overnight deposit ... 30
6.4.1.1 Overview ... 31
6.4.1.2 Overnight deposit process ... 31
6.4.1.2.1 Setup overnight deposit ... 31
6.4.1.2.2 Overnight deposit reverse transaction ... 31
6.4.1.2.3 Overnight deposit reimbursement and interest calculation ... 31
6.4.2 Marginal lending “on request” ... 31
6.4.2.1 Overview ... 31
6.4.2.2 Marginal lending “on request” process ... 31
6.4.2.2.1 Setup marginal lending “on request” ... 31
6.4.2.2.2 Marginal lending reimbursement and interest calculation ... 31
6.4.3 Automatic marginal lending ... 31
6.4.3.1 Overview ... 31
6.4.3.2 Automatic marginal lending process ... 31
6.4.3.2.1 Process automatic marginal lending ... 31
6.4.3.2.2 Marginal lending reimbursement and interest calculation ... 31
6.5 Reference data management ... 31
6.5.1 Concept ... 32
6.5.2 Overview ... 32
6.5.3 Reference data maintenance process ... 32
6.5.3.1 Reference data objects ... 32
6.5.3.2 Reference data maintenance types ... 34
6.5.3.3 Validity of reference data objects ... 34
6.5.3.4 Reference data archiving and purging ... 34
6.5.3.5 Lifecycle of reference data objects ... 34
6.5.3.6 Reference data maintenance instructions processing ... 34
6.5.3.7 Reference data status management ... 34
6.6 Information management ... 34
6.6.1 Status management ... 34
6.6.1.1 Concept ... 34
6.6.1.2 Overview ... 34
6.6.1.3 Status management process ... 35

All rights reserved.

6.6.2 Report generation ... 39
6.6.3 Query management ... 44
6.6.3.1 Concept ... 44
6.6.3.2 Overview ... 44
6.6.3.3 Query management process ... 44
6.6.3.3.1 Common reference data query ... 46

7 Data warehouse ... 48

8 Billing ... 49

9 Legal archiving ... 50

10 Contingency services ... 51

11 Catalogue of messages ... 52

11.1 Introduction ... 52

11.2 General information ... 52
11.2.1 Message validation ... 52
11.2.2 Communication infrastructure ... 52

11.3 List of messages ... 52
11.3.1 Account management (acmt) ... 52
11.3.2 Administration (admi) ... 52
11.3.3 Cash management (camt) ... 52
11.3.3.1 ModifyStandingOrder (camt.024) ... 52
11.3.3.1.1 Overview and scope of the message ... 52
11.3.3.1.2 Schema ... 52
11.3.3.2 GetStandingOrder (camt.069) ... 53
11.3.3.2.1 Overview and scope of the message ... 53
11.3.3.2.2 Schema ... 53
11.3.3.3 ReturnStandingOrder (camt.070) ... 54
11.3.3.3.1 Overview and scope of the message ... 54
11.3.3.3.2 Schema ... 54
11.3.3.4 DeleteStandingOrder (camt.071) ... 55
11.3.3.4.1 Overview and scope of the message ... 55
11.3.3.4.2 Schema ... 55
11.3.4 Headers (head) ... 56
11.3.5 Payments clearing and settlement (pacs) ... 56
11.3.6 Reference data (reda) ... 56

12 Index and digital signature ... 57

12.1 Index of business rules and error codes ... 57

12.2 Index of status value and codes ... 57

All rights reserved.

12.3 Index of instruction references ... 57
12.4 Digital signature on business layer ... 57
13 Additional information for CBs ... 58
13.1 Role of CBs in CLM ... 58
13.2 Reference data for central banks ... 58
13.2.1 Specific data for CBs ... 58
13.2.2 Setup of CLM related reference data ... 58
13.3 Settlement of payments - specific functions for central banks ... 58
13.3.1 Payments linked to monetary policy operations ... 58
13.3.2 Cash withdrawals ... 58
13.4 Credit line management ... 58
13.4.1 Credit line update ... 58
13.4.1.1 Overview ... 58
13.4.1.2 Credit line update process ... 58
13.4.2 Connected payment ... 58
13.4.2.1 Overview ... 58
13.4.2.2 Connected payment process ... 59
13.5 End-of-day procedures ... 62
13.6 Query management - CB specific queries ... 62
13.7 Business/liquidity monitoring for CBs ... 62
13.8 Reserve management - specific functions for CBs ... 62
13.9 Standing facilities - specific functions for CBs ... 62
13.10 Data warehouse - specific functions for CBs ... 62
13.11 Billing - specific functions for CBs ... 62
13.12 Contingency services - specific functions for CBs ... 62
13.13 Specific requirements for CBs of "out" countries ... 62
14 Glossary ... 63

All rights reserved.

List of figures

Figure 1 - pacs.009 CB operations 17
Figure 2 - pacs.009 CB operations technical validation failed 18
Figure 3 - pacs.009 CB operations business validation failed 20
Figure 4 - pacs.010 CB operations 21
Figure 5 - pacs.010 CB operations technical validation failed 22
Figure 6 - pacs.010 CB operations business validation failed 24
Figure 7 - camt.007 27
Figure 8 - CLM Report generation process 41
Figure 9 - pacs.009 connected payment 59
Figure 10 - pacs.010 connected payment 61

All rights reserved.

1 Overview CLM service

2 Parties, accounts and currencies

2.1 General information on reference data

2.1.1 Concept of parties and participants

2.1.2 Hierarchical party/participant model

2.1.3 Configuration of parties/participants

2.1.4 Party/participant identification

2.1.5 Reference data for parties/participants

2.2 CLM related reference data

2.2.1 Participation types

2.2.1.1 Direct participation in CLM

2.2.1.2 Multi-addressee access

2.2.1.3 Access as correspondent BIC ("addressable BIC")

2.2.2 Accounts structure and organization

2.2.2.1 Categories of accounts

2.2.2.2 Main cash accounts

2.2.2.3 Transit accounts

All rights reserved.

2.2.2.4 Links between MCAs and DCAs

2.2.2.5 Account monitoring group, liquidity transfer group and whitelist

2.2.3 Blocking

2.2.3.1 General aspects

2.2.3.2 Blocking of a party or a cash account in CLM

2.2.4 Concept of currencies in CLM

2.2.5 CLM directory

All rights reserved.

3 Access to CLM

3.1 Connectivity (A2A/U2A)

3.2 Authentication and authorisation

3.2.1 Authentication and authorisation concepts

3.2.2 Instructing scenarios

3.3 User roles and access rights

3.4 Message subscription

3.5 Graphical user interface

3.6 Security

All rights reserved.

4 Business day

5 Operations and support

5.1 Business application configuration

5.2 Calendar management

5.3 Business day management

5.4 Business and operations monitoring

5.5 Archiving management

5.6 Trouble management

All rights reserved.

6 Application processes description

6.1 Settlement of payments linked to CBOs

6.1.1 Overview

A central bank system can send a payment order (pacs.009) or a direct debit (pacs.010) linked to a central bank operation or cash withdrawal to a CLM participant that holds a MCA in CLM. In Case this can also be a connected payment, ie payments, that trigger a change in the credit line of the CLM participant and an immediate debit/credit of its account to compensate the change in this credit line. Payment orders and direct debits can be sent throughout the whole business day with the exception of the end of day processing (with the exception of the marginal lending facility) and the maintenance window. The processing of connected payments shall not be possible between the CB general cut-off for the use of standing facilities (ie 18:40) and the start of the provisioning of liquidity for the new business day (ie 19:00), as well as during the maintenance window. Central banks have the possibility to send payments with an “earliest debit time indicator” (FROM-Time) and with a “latest debit time indicator” (TILL-Time). Furthermore it is possible, to submit payments up to 10 calendar days in advance. In this case, the payment message is warehoused until CLM opens for that date. All Payments have the same priority. There is no need to distinguish between urgent and normal payments. At the settlement date, the warehoused payment undergoes the business validation checks for a second time.

The initiation can be carried out A2A by the central bank system or U2A by the CB operator. There can be submitted the following payment types:

- credit transfers or
- direct debits used for the settlement of cash withdrawals, repayment of monetary policy operations and collections of fees

6.1.2 Definition of execution time

CLM participants have also the possibility to determine the settlement time of their transactions. The following options are available:

- transactions with an “earliest debit time indicator”
- transactions with a “latest debit time indicator”

The following table describes payments with a set execution time.

All rights reserved.

	Earliest debit time indicator	Latest debit time indicator
Features	Transactions to be executed from a certain time (codeword: FROTIME)	▌ Transactions which should be executed up to certain time (only warning indicator) (codeword: /TILTIME/)
Effect	▌ Transaction is stored until the indicated time. ▌ At the earliest debit time, the transaction runs through the entry disposition.	▌ Setting the execution time only means a special identification via the U2A or A2A query. ▌ The transaction is treated like any other payment of this type.
Management	If the transaction cannot be settled at the earliest debit time, it will be queued till cut-off time for payment type is reached (or revoked).	If the transaction cannot be settled until the indicated debit time, the payment will remain in the queue.

In case a payment with a “latest debit time indicator” is not executed 15 minutes prior to the defined time, an automatic notification in the GUI will be triggered. The notification will be directly displayed on top of all screens of the participant whose account will be debited.

Note: In case the codeword /CLSTIME/ is used, the payment will be treated in the same way as a payment with a “latest debit time indicator”.

It is possible to combine the “earliest debit time indicator” with the “latest debit time indicator”. The transaction is meant to be executed during the indicated period.

The defined execution time of a payment can be changed if the payment is not executed yet. Effect of changing settlement time see chapter Amendment of payments [▸ 26].

Note: It is no longer possible to change the “earliest debit time indicator” of a payment which is queued due to the fact that the original “earliest debit time indicator” has been reached and it was already tried to settle this payment.

6.1.3 Warehouse functionality

Basics

It is possible to submit payments up to 10 calendar days in advance. In this case, the payment message is warehoused until RTGS service opens for that business date.

Note: In case a change in SWIFT standards or formats is performed warehoused payments with an execution time beyond this point in time cannot be stored in the RTGS service. This will be technically ensured by the RTGS service.

All rights reserved.

Rules

The validation of warehoused payments is a three layer approach:

- SWIFT format checks on the day of submission
- format checks by CLM service already on the day of submission
- content check (eg valid BICs) on the value day

No checks are made by SSP in the time between.

Processing on value day

On the value date with the start of the day trade phase (7.00) the warehoused payments are processed by CLM service (with entry timestamp 7.00) on top of the queue of incoming payments which have the same priority. They will be immediately settled if enough liquidity is available (normal processing of payments in the entry disposition, see chapter Entry disposition [▸ 29]. Otherwise they are queued until the settlement attempt is successful (see chapter Dissolution of the payment queue [▸ 29]).

Exception: Warehoused payments with an earliest debit time indicator are queued until the set execution time is reached.

Information and control functions

Warehoused payments benefit from the same functionality via U2A or A2A as queued payments:

- transparency about the status and other detailed information about the payment
- cancellation
- change of priority
- change of execution time (earliest and latest debit time indicator) if set in the warehoused payment

6.1.4 Flow of payments

6.1.4.1 Payments initiated by central bank

6.1.4.1.1 Credit transfer

Positive case

A central bank system can send a payment order linked to a central bank operation or cash withdrawal to a CLM participant that holds a MCA in CLM. Such a payment can be sent throughout the whole business day with the exception of the end of day processing (with the exception of the marginal lending facility) and the maintenance window. Central banks have the possibility to send payments with an “earliest debit time indicator” (FROM-Time) and with a “latest debit time indicator” (TILL-Time). Furthermore it is possible to submit

All rights reserved.

payments up to 10 calendar days in advance (warehoused payments). In this case, the payment message is warehoused until CLM opens for that date. All payments have the same priority. There is no need to distinguish between urgent and normal payments.

Message flow

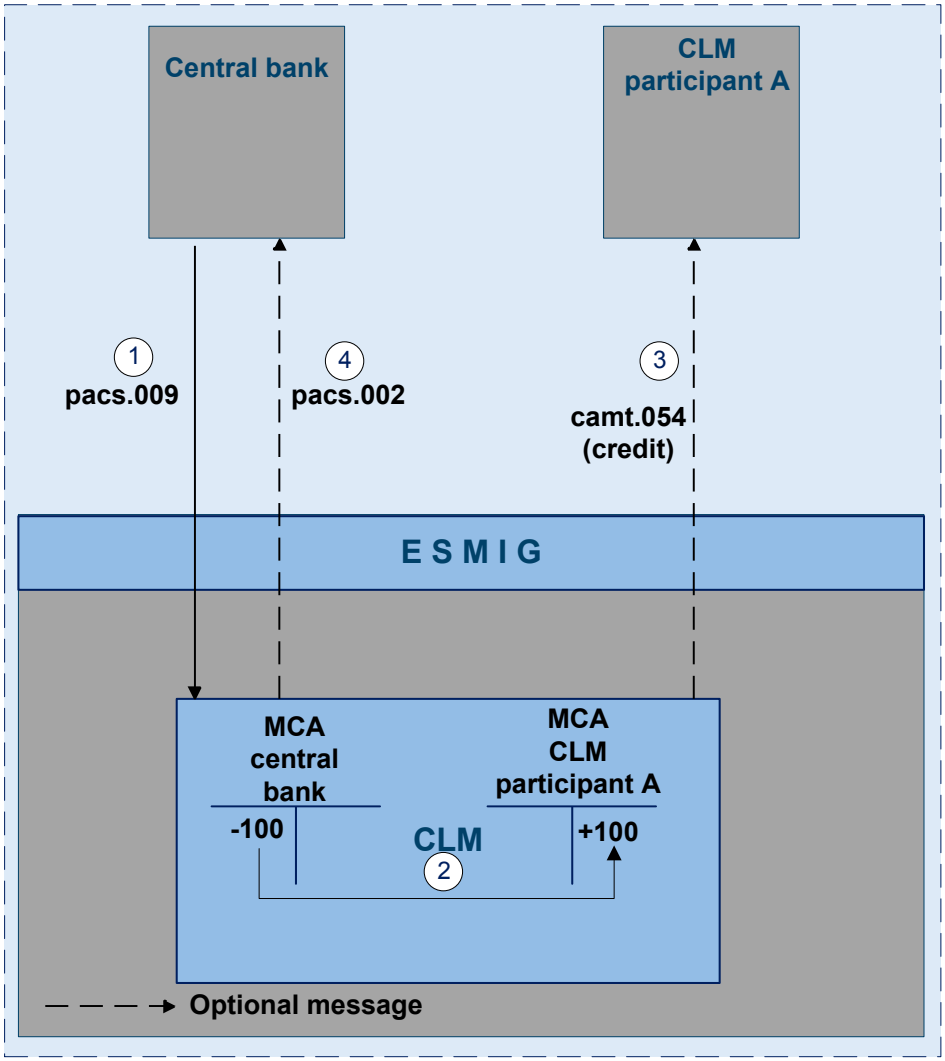

Figure 1 - pacs.009 CB operations

Process description

Step	Processing in/between	Description
1	Central bank via ESMIG to CLM	The central bank sends a pacs.009 via ESMIG to CLM
2	CLM	CLM message check and validation positive booking takes place in CLM
3	CLM via ESMIG to CLM participant	Creation and forwarding camt.054 (credit) (optional) by CLM via ESMIG to CLM participant A

All rights reserved.

Step	Processing in/between	Description
4	CLM via ESMIG to central bank	Creation and forwarding of pacs.002 by CLM via ESMIG to central bank (optional)

Used messages

- pacs.009
- camt.054
- pacs.002

Technical validation failure

The service interface performs the following technical validations:

- type (including version) of delivered message is supported
- schema validation - syntax, format and structure of the message are compliant (eg all mandatory fields in the message received are populated)

If the technical validation fails the service interface rejects the message.

Message flow

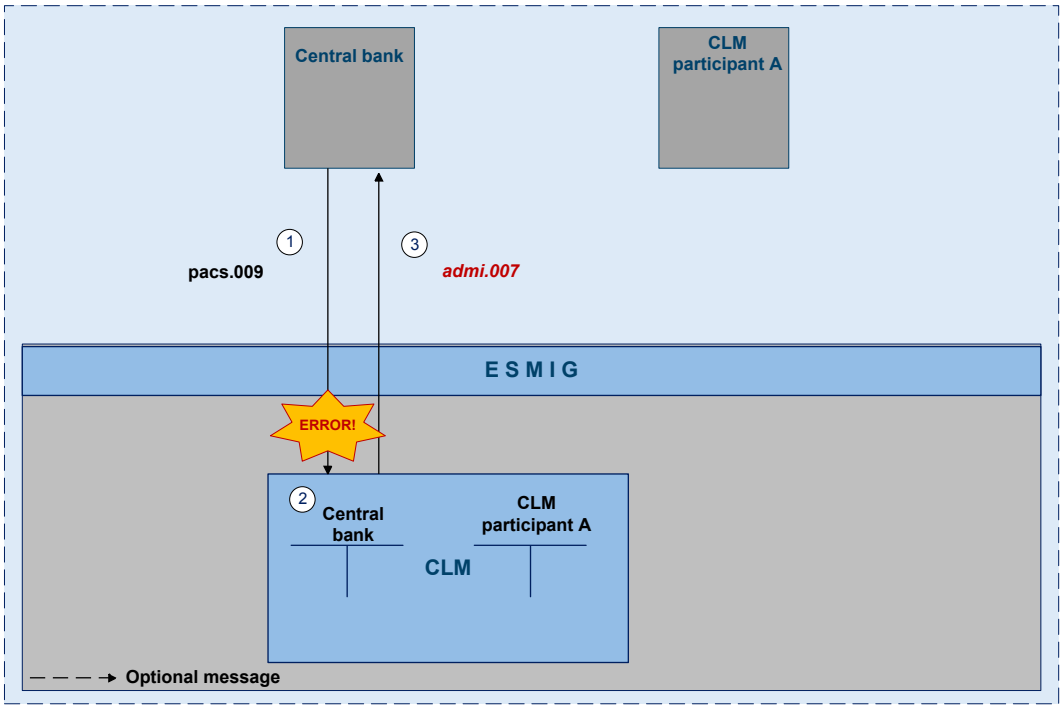

Figure 2 - pacs.009 CB operations technical validation failed

Process description

Step	Processing in/between	Description
1	Central bank via ESMIG to CLM	The central bank sends a pacs.009 via ESMIG to CLM

Step	Processing in/between	Description
2	CLM	CLM technical validation failed
3	CLM via ESMIG to central bank	Creation and forwarding of admi.007 by CLM via ESMIG to central bank

Used messages

- pacs.009
- admi.007

Business failure

The service interface performs the following business validations:

- Duplicate submission control for incoming payments including the fields:
  - sender of the message
  - message Type
  - receiver
  - transaction Reference Number
  - related Reference
  - value Date and
  - amount
- The sender of the message is authorised to send payments linked to central bank operations or cash withdrawals. If the sender of the message is not the owner of the MCA, CLM shall check that it is authorised to send a payment order on behalf of the account owner.
- All provided values are valid according to predefined values or cross-field validations.
- The MCA and the central bank account mentioned in the payment order exist and are active for settlement in the relevant currency.
- The MCA owner is not blocked at account or party level.

If the business validation fails the interface rejects the message.

All rights reserved.

Message flow

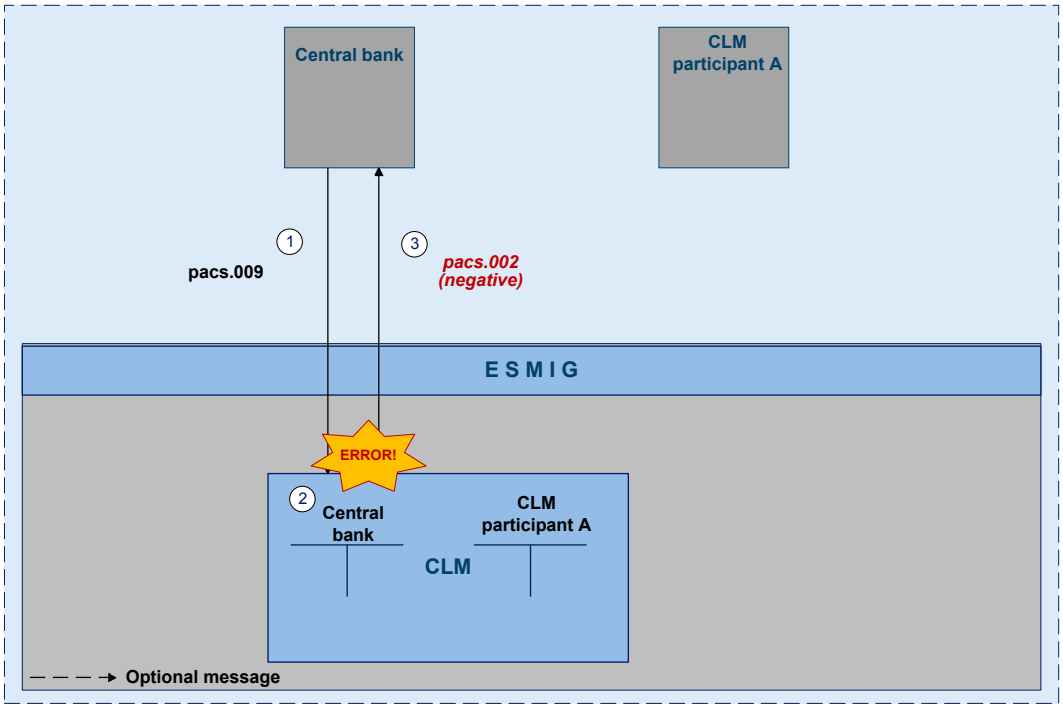

Figure 3 - pacs.009 CB operations business validation failed

Process description

Step	Processing in/between	Description
1	Central bank via ESMIG to CLM	The central bank sends a pacs.009 via ESMIG to CLM
2	CLM	CLM business validation failed
3	CLM via ESMIG to central bank	Creation and forwarding of a negative pacs.002 by CLM via ESMIG to central bank

Used messages

- pacs.009
- pacs.002

6.1.4.1.2 Direct debit

Positive case

A central bank system can send a direct debit linked to a central bank operation or cash withdrawal to a CLM participant that holds a MCA in CLM. Such a payment can be sent throughout the whole business day with the exception of the end of day processing (with the exception of the marginal lending facility) and the maintenance window. Central banks have the possibility to send payments with an “earliest debit time indicator” (FROM-Time) and with a “latest debit time indicator” (TILL-Time). Furthermore it is possible to submit

payments up to 10 calendar days in advance (warehoused payments). In this case, the payment message is warehoused until CLM opens for that date. All Payments have the same priority. There is no need to distinguish between urgent and normal payments.

Message flow

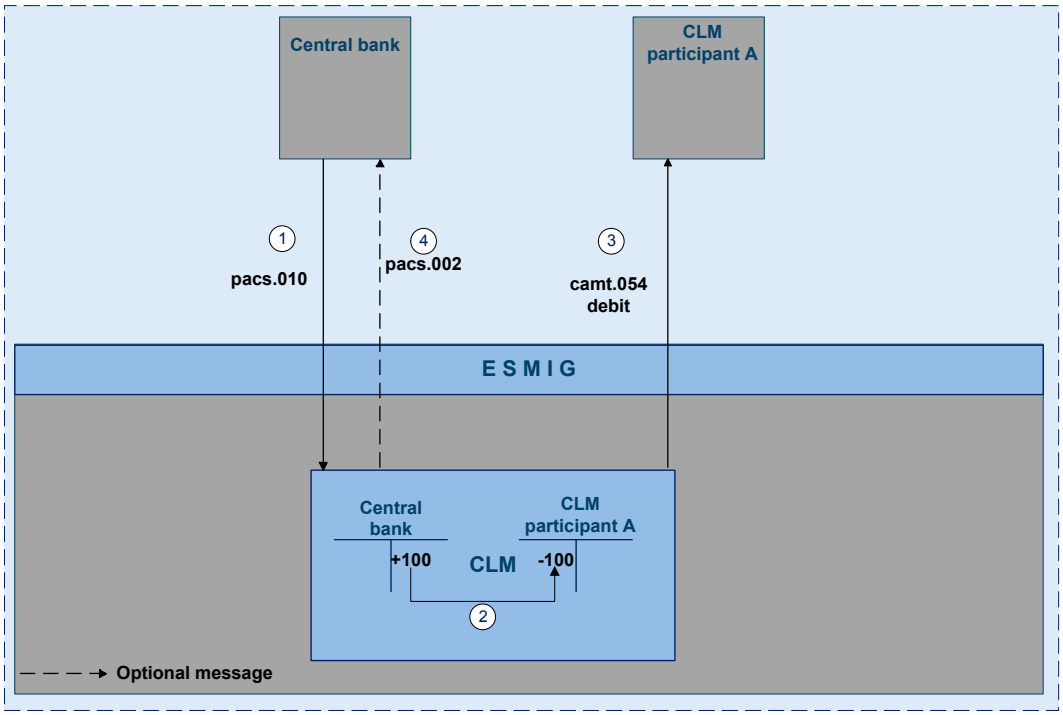

Figure 4 - pacs.010 CB operations

Process description

Step	Processing in/between	Description
1	Central bank via ESMIG to CLM	The central bank sends a pacs.010 via ESMIG to CLM
2	CLM	CLM message check and validation positive booking takes place in CLM
3	CLM via ESMIG to CLM participant	Creation and forwarding of camt.054 (debit) (optional)by CLM via ESMIG to CLM participant A
4	CLM via ESMIG to central bank	Creation and forwarding of pacs.002 by CLM via ESMIG to central bank(optional)

Used messages

- pacs.010
- camt.054
- pacs.002

All rights reserved.

Technical validation failure

The service interface performs the following technical validations:

- type (including version) of delivered message is supported
- schema validation - syntax, format and structure of the message are compliant (eg all mandatory fields in the message received are populated).

If the technical validation fails the service interface rejects the message.

Message flow

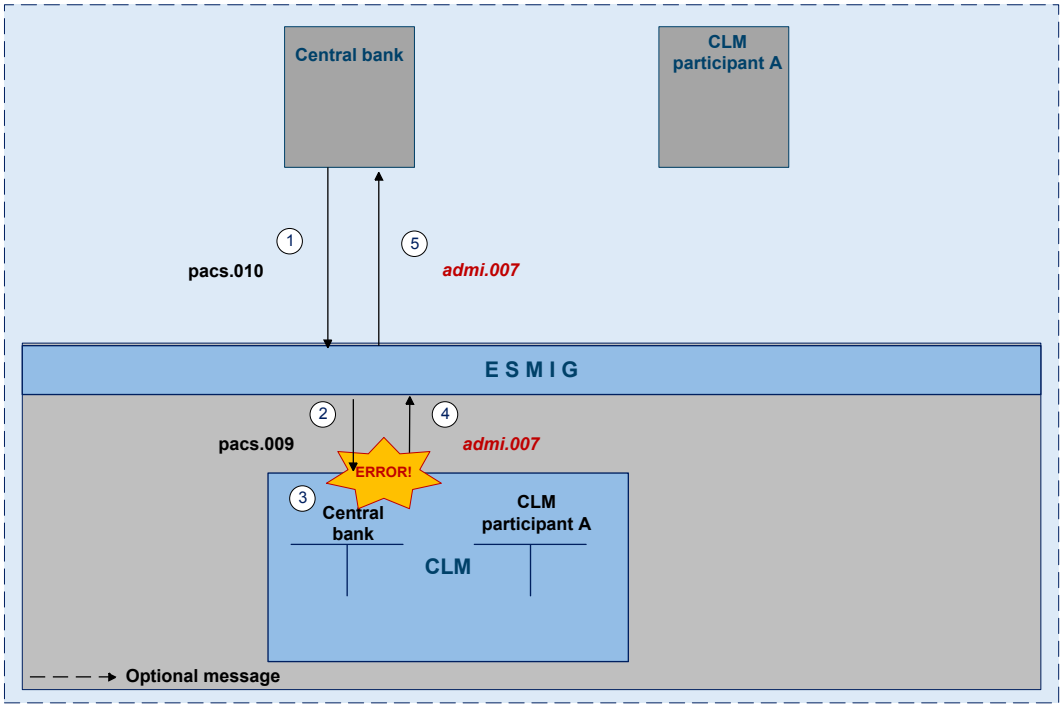

Figure 5 - pacs.010 CB operations technical validation failed

Process description

Step	Processing in/between	Description
1	Central bank via ESMIG to CLM	The central bank sends a pacs.010 via ESMIG to CLM
2	CLM	CLM technical validation failed
3	CLM via ESMIG to central bank	Creation and forwarding admi.007 by CLM via ESMIG to central bank

Used messages

- pacs.010
- admi.007

Business failure

The service interface performs the following business validations:

- Duplicate submission control for incoming payments including the fields
  - sender of the message
  - message Type
  - receiver
  - transaction reference number
  - related reference
  - value Date and
  - amount
- The sender of the message is authorised to send payments linked to central bank operations or cash withdrawals. If the sender of the message is not the owner of the MCA, CLM shall check that it is authorised to send a payment order on behalf of the account owner.
- All provided values are valid according to predefined values or cross-field validations
- The MCA and the central bank account mentioned in the payment order exist and are active for settlement in the relevant currency.
- The MCA owner is not blocked at account or party level.

If the business validation fails, the interface will reject the message.

All rights reserved.

Message flow

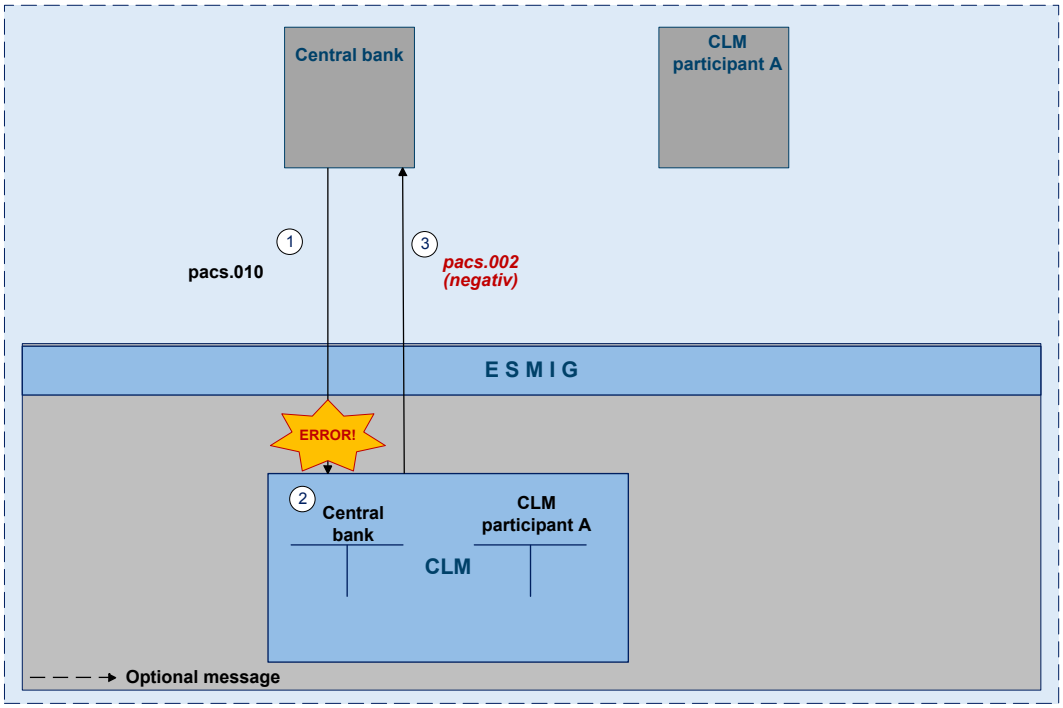

Figure 6 - pacs.010 CB operations business validation failed

Process description

Step	Processing in/between	Description
1	Central bank via ESMIG to CLM	The central bank sends a pacs.010 via ESMIG to CLM
2	CLM	CLM business validation failed
3	CLM via ESMIG to central bank	Creation and forwarding a negative pacs.002 by CLM via ESMIG to central bank

Used messages

- pacs.010
- pacs.002

6.1.5 Rejection of payments

For different reasons a payment can be rejected and returned to sender. If business validation in CLM interface fails the CLM service creates and forwards a pacs.002 (negative – payment status report) to the instructing party. This can be every CLM participant who initiates a payment. The pacs.002 refers to the original instruction by means of references and a set of elements from the original instruction. Negative pacs.002 message is mandatory.

All rights reserved.

The following business validations are performed in CLM interface:

- check for duplicate payment order
- process specific authorisation checks:
  - Is the sender of the payment order the owner of the account to be debited?
  - In case of direct debit: is the sender of the payment order the owner of the account to be credited?
  - In case of mandated payments: is the sender of the payment order the neither the debtor nor the creditor and are there contractual agreements between the parties?
  - In case a central bank acts on behalf of a credit institution: does the credit institution belong to the acting central bank?
- check on value date for non-warehouse payments
- payment type specific checks
- field and reference data checks:
  - field value validation - codes are valid, domain values are within allowed range
  - cross-field validation - eg currency of the accounts involved same as amount currency etc.
  - database checks - eg existence of parties and accounts
- direct debit check
- check of backup payments
- mandated payment check
- account checks
- Error codes for possible rejections are listed in chapter Index of business rules and error codes [▸ 57].

If technical validation fails the payment is returned by admi.007.

All rights reserved.

6.1.5.1 Technical validations

6.1.5.2 Business validations

6.1.6 Amendment of payments

As long as a payment is not settled (including warehoused payments), an authorised system user has the ability to change the relevant parameters of this payment.

Three different control options are offered:

Action	Actor = authorised system user for the
Re-ordering (increase / decrease)	Debtor
Change of set execution time (if defined before sending to the RTGS service)	Business sender
Revocation (separate chapter Revocation of payments)	Business sender

Those features are necessary to enable CLM Actors to react on changed liquidity conditions during the day.

Note: Changing of priority is not possible as all payments have the same priority.

The following rules apply in principle:

- Interventions must be made via the business interface of the CLM service in U2A and A2A. A description of individual U2A processes can be found in the user handbook.
- Individual or several payment orders together can be modified at the same time.
- The business interface shows receipt and execution or non-execution of a modified order.

In case of intervention at transaction level, processes are started to resolve the queues.

All rights reserved.

Message flow

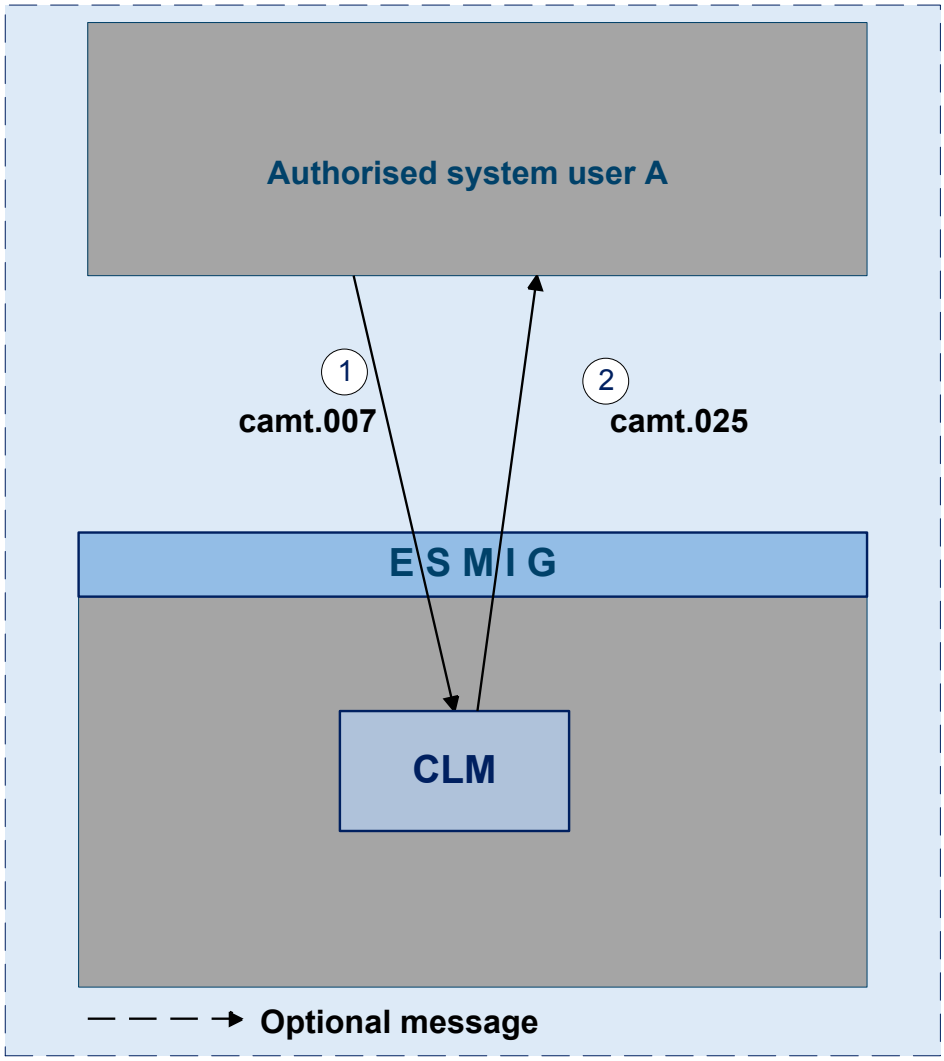

Figure 7 - camt.007

Process description

Step	Processing in/between	Description
1	Authorised system user via ESMIG to CLM	An authorised system user A sends a camt.007 via ESMIG to the CLM service
2	CLM	CLM message check and validation with positive or negative result
3	CLM via ESMIG to the authorised system user	Mandatory feedback to the authorised system user via camt.025

Used messages

- camt.007
- camt.025

All rights reserved.

Case re-ordering the queued transactions

A system user authorised can change the queue position for an individual or for a sequence of payments. The selected payment or sequence of payments can be placed:

- to the top of the queued payments
- to the end of the queued payments

The re-ordering can be done at any time during the business day. The newly modified queue can be viewed through the Payment Queue query.

Case changing the execution time

Payments can include a time that indicates when they should be settled (transactions with an “earliest debit time indicator”).

Payments can include a time that indicates when they should have been settled (transactions with a “latest debit time indicator”).

The execution time (from/till) may be changed in the CLM business interface (advanced or postponed). The change has no impact on the payment processing, but on the queue management as the time indication only supports the CLM participant’s queue management. The changed execution time is part of the payment queue query result.

Changing the execution time has the following impact on the queue management:

Action	Effect
Deleting the execution time of an urgent transaction (“from“)	Immediate settlement attempt, if the payment reaches the top of the queued urgent payments
Deleting the execution time of a high transaction (“from“)	Immediate settlement attempt, if the payment reaches the top of the queued high payments and no urgent payments are queued
Deleting the execution time of a normal transaction	Including the payment in the next settlement process
Changing the execution time of a urgent, high or normal transaction	Including the payment from the new indicated time

The newly modified execution time can be viewed through the Payment queue query.

All rights reserved.

6.1.7 Revocation of payments

6.1.8 Processing of payments

6.1.8.1 Entry disposition

6.1.8.2 Comprehensive queue management

6.1.8.3 Dissolution of the payment queue

6.2 Liquidity management

6.2.1 Available liquidity

6.2.2 Liquidity transfer

6.2.2.1 Overview

6.2.2.2 Initiation of liquidity transfers

6.2.2.3 Liquidity transfer process

6.2.2.3.1 Liquidity transfer from CLM MCA to settlement service

6.2.2.3.2 Liquidity transfer from settlement service to CLM MCA

6.2.2.3.3 Liquidity transfer between two CLM MCAs

6.2.2.3.4 Liquidity transfer between two DCAs in different settlement services

6.2.2.3.5 Rejection of liquidity transfer orders

All rights reserved.

6.2.2.3.5.1 Technical validations

6.2.2.3.5.2 Business validations

6.2.3 Liquidity management features

6.2.3.1 Liquidity reservation

6.2.3.1.1 Overview

6.2.3.1.2 Liquidity reservation process

6.2.3.1.3 Effect of liquidity reservation

6.2.3.2 Floor/ceiling

6.2.3.2.1 Definition of floor/ceiling threshold

6.2.3.2.2 Breach of floor/ceiling threshold - notification

6.2.3.2.3 Breach of floor/ceiling threshold - automatic liquidity transfer

6.3 Reserve management

6.3.1 Overview

6.3.2 Reserve management process

6.4 Standing facilities management

6.4.1 Overnight deposit

All rights reserved.

6.4.1.1 Overview

6.4.1.2 Overnight deposit process

6.4.1.2.1 Setup overnight deposit

6.4.1.2.2 Overnight deposit reverse transaction

6.4.1.2.3 Overnight deposit reimbursement and interest calculation

6.4.2 Marginal lending “on request”

6.4.2.1 Overview

6.4.2.2 Marginal lending “on request” process

6.4.2.2.1 Setup marginal lending “on request”

6.4.2.2.2 Marginal lending reimbursement and interest calculation

6.4.3 Automatic marginal lending

6.4.3.1 Overview

6.4.3.2 Automatic marginal lending process

6.4.3.2.1 Process automatic marginal lending

6.4.3.2.2 Marginal lending reimbursement and interest calculation

6.5 Reference data management

All rights reserved.

6.5.1 Concept

6.5.2 Overview

6.5.3 Reference data maintenance process

The common reference data maintenance process can be described as a common message flow that applies to every business scenario.

Upon the sending of a request instructed with an input message, a related response message or a technical validation error message is returned.

6.5.3.1 Reference data objects

The shared generic message flow is as follows:

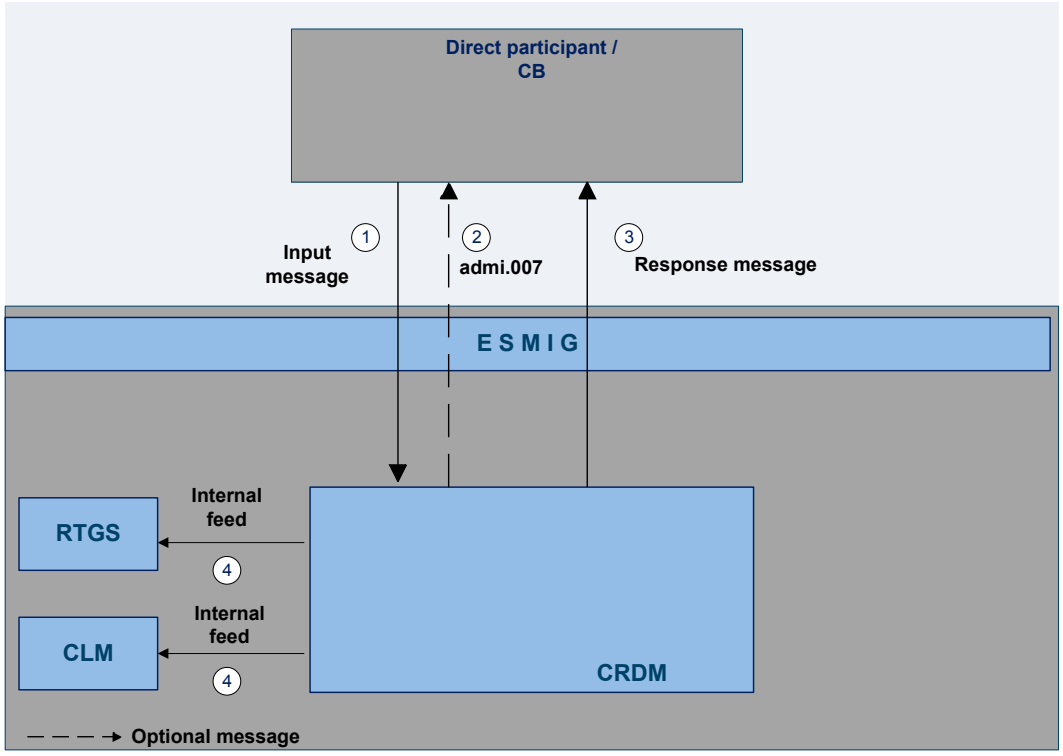

Step	Activity
1	The authorised actor (CLM or RTGS participant or another actor operating on behalf of the MCA or RTGS owner under a contractual agreement) sends the input message to CRDM to create, modify or delete a common reference data entity.
2	In case of rejection upon technical validation, an admi.007 receipt acknowledgement is sent by CRDM to the sender of the originating request.

All rights reserved.

Step	Activity
3	CRDM performs the business validation and sends to the authorised actor a response message to report processing result.
4	CRDM will propagate the updated information to the subscribing services for their internal processing.

The messages used in the interaction change depending on the business scenario to be covered.

In the following table, for every concerned common reference data entity and related business scenario, the input and response messages are defined.

Business scenario	Input message	Response message
Create standing order	camt.024	camt.025
Modify standing order	camt.024	camt.025
Delete standing order	camt.071	camt.025

All rights reserved.

6.5.3.2 Reference data maintenance types

6.5.3.3 Validity of reference data objects

6.5.3.4 Reference data archiving and purging

6.5.3.5 Lifecycle of reference data objects

6.5.3.6 Reference data maintenance instructions processing

6.5.3.7 Reference data status management

6.6 Information management

6.6.1 Status management

6.6.1.1 Concept

EMIP services inform their EMIP actors of the processing results. This information is provided to the EMIP actors through a status reporting which is managed by the status management process. The communication of statuses to EMIP Actors is complemented by the communication of reason codes in case of negative result of an EMIP service process.

6.6.1.2 Overview

The status management process manages the status updates of the different instructions existing in EMIP service in order to communicate these status updates through status advice messages to the EMIP actors throughout the lifecycle of the instruction. The status management process also manages the reason codes to be sent to EMIP actors in case of negative result of an EMIP service process (eg to determine the reason why an instruction is unsuccessfully validated or settled).

The status of an instruction is indicated through a value, which is subject to change through the lifecycle of the instruction. This value provides EMIP actors with information about the situation of this instruction with respect to a given EMIP process at a certain point in time.

All rights reserved.

Since each instruction in an EMIP service can be submitted to several processes, each instruction in EMIP has several statuses. However, each of these statuses has one single value at a certain moment in time that indicates the instruction's situation at the considered moment. Depending on its instruction type, an instruction is submitted to different processes in T2S. Consequently, the statuses featuring each instruction depend on the considered instruction type.

The following sections provide:

- the generic principles for the communication of statuses and reason codes to EMIP actors
- the list of statuses featuring each instruction type as well as the possible values for each of these statuses
- an overview of the reason codes management

However, reason codes are not exhaustively detailed below but are provided in section Index of status value and codes [▸ 57].

6.6.1.3 Status management process

Communication of statuses and reason codes to EMIP actors

EMIP actors can query, at any point in time, the status values and reason codes of their instructions.

The statuses can be classified into two different types, common to all type of instructions:

- "Intermediate status" - There is a change occurred in any of the statuses of the instruction, but it does not imply the end of the processing of the instruction in EMIP. Further status updates are to be communicated to the EMIP actors until an "end status" is sent.
- "Final status" - This is the last status of an instruction (ie the status that an instruction has when processing for that instruction ends). If the status of an instruction is not of an "end status" type, then the instruction is still under process in EMIP. At a point in time, any instruction in EMIP reaches an "end status", as any instruction is settled, executed, cancelled or denied in the end.

For some specific status updates, the status management process informs the EMIP actors of the status change through the sending of status advice messages (according to their message subscription configuration).

Statuses and status values in EMIP

As previously mentioned, the statuses of an instruction depend on the considered instruction type. The following paragraphs provide the list of statuses and status values.

CLM service statuses are:

- message statuses
- payment statuses

All rights reserved.

CRDM statuses are:

- reference data maintenance instruction processing status

Message statuses

Indicates the status of the message (not applicable for queries) and it can have the following statuses:

Status value	Definition	Direction	Intermediate status/ final status
System entry	Message status after entering the CLM service	Incoming	Intermediate
Waiting for open queue	Message status of a message arriving before the “Start of day trade phase”	Incoming	Intermediate
Warehoused	Status of a message with a value date in the future or status of a message with the value date of the current business day until it will be forwarded to the processing at the start of the day trade phase	Incoming	Intermediate
Processed	Message status if an incoming message is finally processed independent of whether the result is positive or negative	Incoming	Final
To be provided	Status of an outgoing message ready to be send to ESMIG	Outgoing	Intermediate
Provided	Status of an outgoing message sent to ESMIG	Outgoing	Final

One business case can include one or more single messages which may have different message status. The message status is the detailed status related to the processing of each single message of a business case. The business case status is a result of the message status and the related processing.

Message statuses will not be reported via status message.

Payment statuses

Indicates the status of the payment instruction and it can have the following statuses:

Status value	Definition	Intermediate/ final status	Reported via status message
Valid	Status after positive business validation	Intermediate	-

All rights reserved.

Status value	Definition	Intermediate/ final status	Reported via status message
Warehoused	Status of a payment with a value date of a future business day and status of a payment with the value date of the current business day until it will be forwarded to the processing at the start of the day trade phase. From then on they will be processed normally. To this booking status a time stamp is added. In general, warehoused payments are submitted up to ten calendar days in advance. In this case, the payment message will be warehoused until the day trade phase of CLM with the respective date starts.	Intermediate	
Earmarked	Status of a payment which is ready for booking but not taken into account for various reasons. The booking status earmarked is split into the following business case status: - Accounting stopped due to earliest debit time indicator - AS accounting not yet started due to active information period - Accounting stopped due to exclusion - Pending decision on exclusion - Waiting for end of cycle - Waiting for completion of debits - Waiting for algorithm 4	Intermediate	-
Queued	Status of a payment which is ready for booking but the first booking attempt was unsuccessful. Pending payments are waiting for the next booking attempt. To this booking status a time stamp is added.	Intermediate	-
Revoked	Status of a payment which is revoked by a system user	Final	-
Rejected	Status of a payment which is rejected by the system or by a system administrator (all payments with error code, except error code for revoked)	Final	Mandatory
Settled	Status of a payment after booking. Final payments cannot be revoked.	Final	Optional
Invalid	Messages which are negatively business validated in the entry disposition and do not lead to a booking attempt	Final	-

All rights reserved.

Task queue statuses

All data inputs or data changes by the user (called tasks, eg entering a liquidity transfer) are managed in the task queue administration of the respective service. The following statuses apply for CLM service.

Status value	Definition	Transition possible to status	Intermediate/ final status
To confirm	The task must be confirmed by a second user and will not be processed. This status can only occur in U2A for four eyes principle. It is the only status in which a task revocation is possible directly via respective screens.	Processing, revoked, rejected	Intermediate
Processing	The task is ready to be processed at the moment. It can only occur directly after the task initiation (or after “to confirm” in case of four eyes principle).	Waiting, pending, partially pending, revoked, rejected, completed	Intermediate
Waiting	The task can be processed, but the processing is not started till now, eg due to a running or stopped algorithm.	Pending, partially pending, revoked, completed, rejected	Intermediate
Pending	A task should be stored with status “pending”, if the task was already tried to process at least one time but it could not be finalised. The processing was interrupted after the storage of entries initiated by the task and before the final processing of these entries. The task will be updated and further processed, if the preconditions for the pending status (eg liquidity increase) are changed.	Partially pending, completed, revoked, rejected	Intermediate
Partially pending	A task should be stored with status “partially pending” if the user's order cannot be processed completely (eg an increase of reservation cannot be executed completely because of lack of liquidity). The order is processed as far as possible. The task will be updated and further processed, if the preconditions for the "partially pending" status (eg liquidity increase) are changed.	Completed, revoked, rejected	Intermediate
Revoked	The task has been revoked by a user.	-	Final
Rejected	An error was detected.	-	Final
Completed	The task was processed successfully and the business case stemming from the task is final. The tasks changing an existing business case (like	-	Final

All rights reserved.

Status value	Definition	Transition possible to status	Intermediate/ final status
	queue management) are completed, if the respective action is completely processed. The business case (managed payment) does not have to be final.		

Note: The responsibility for the tasks switches over from the user to the respective service according to the storage of the entry time.

The relevant entry time is stored:

- for two eyes principle: by storage of the task within the responsible service.
- for four eyes principle: by storage of the confirmation.

Note: Tasks with status “waiting“, “processing“ or “pending“ can only be revoked via a new task, eg a credit line can only exist once per participant. Therefore the second credit line change will revoke the first one.

Reference Data maintenance instruction processing status

6.6.2 Report generation

Concept

EMIP services periodically inform with a set of predefined reports which deliver information specifically for the service business. They contain information, which is based on the data available for a party. The respective service triggers the generation of a report based on a business event, eg end of day, or at a predefined time. Please see chapter Index of status value and codes [▸ 57] for the list of configurable business events. Depending on the party’s preferences the report is either sent out directly after creation or stored for later retrieval via the report query.

Overview

The report types generated by the respective service and the sort of information provided are described below.

In general all reports differ in and are defined by the following characteristics:

- the concerned party
- the sort of information collected
- the moment of data extraction during the business day and
- the reporting period

All rights reserved.

All information about the necessary attributes in each named category is stored as static data in CRDM and influences the generation of the report.

Report generation process

A generated report is available for download until it is replaced by the next, new generation of it, ie a report that is created at the end of day of the current business day replaces the report that was created at the end of day of the previous business day. The replaced report is no longer available for download. Nonetheless, as any other message, a report can be resent if the report message was sent in A2A mode before.

Sort of information - Report types

The EMIP services provide the following report type:

Report providing service	Report name	ISO message	ISO code
CLM	Statement of accounts	BankToCustomerStatement	camt.053

Concerned party

Each report type provides information on a certain scope of data. The data scope is indicated by the party for which it is configured. In addition to reports on party level, CBs can also opt for reports on system entity level, ie reports providing the CB with information relating to all its parties. CBs can only configure reports on system entity level for themselves.

The concerned party has to be specified, when the report is configured for the first time.

Moment of data extraction

The creation of a report is always triggered at a certain point in time by the respective EMIP service. This point in time can be a specific time, eg 10:00 am or a specific event of the business day, eg end of day. A new report configuration can be set-up at the earliest for the next business day. The moment of data extraction as well as possible validity limitations have to be specified when the report is configured for the first time. The respective service only creates those reports for which the underlying report configurations is valid at the current business day.

Reporting period

The EMIP services distinguish between two different report classifications - complete reports and delta reports, which are all based on the latest available data. The difference between both is the time scope which is considered:

- Complete reports cover the current business day and provide the current values of all selected items at the time of the creation of the report.

All rights reserved.

- Delta reports also consider the current business day but provide only information on the selected items which values changed since the previous report was created. The previous report can likewise be a complete report or a delta report. Therefore, the creation timestamp of the previous report is considered as the starting point in time for the reporting period. If there is no previous report for the current business day, the SoD is considered as the starting point in time for the reporting period.

Possible recipients of a report

All reports can be received by the technical address of

- concerned party
- another authorised party (eg co-manager)

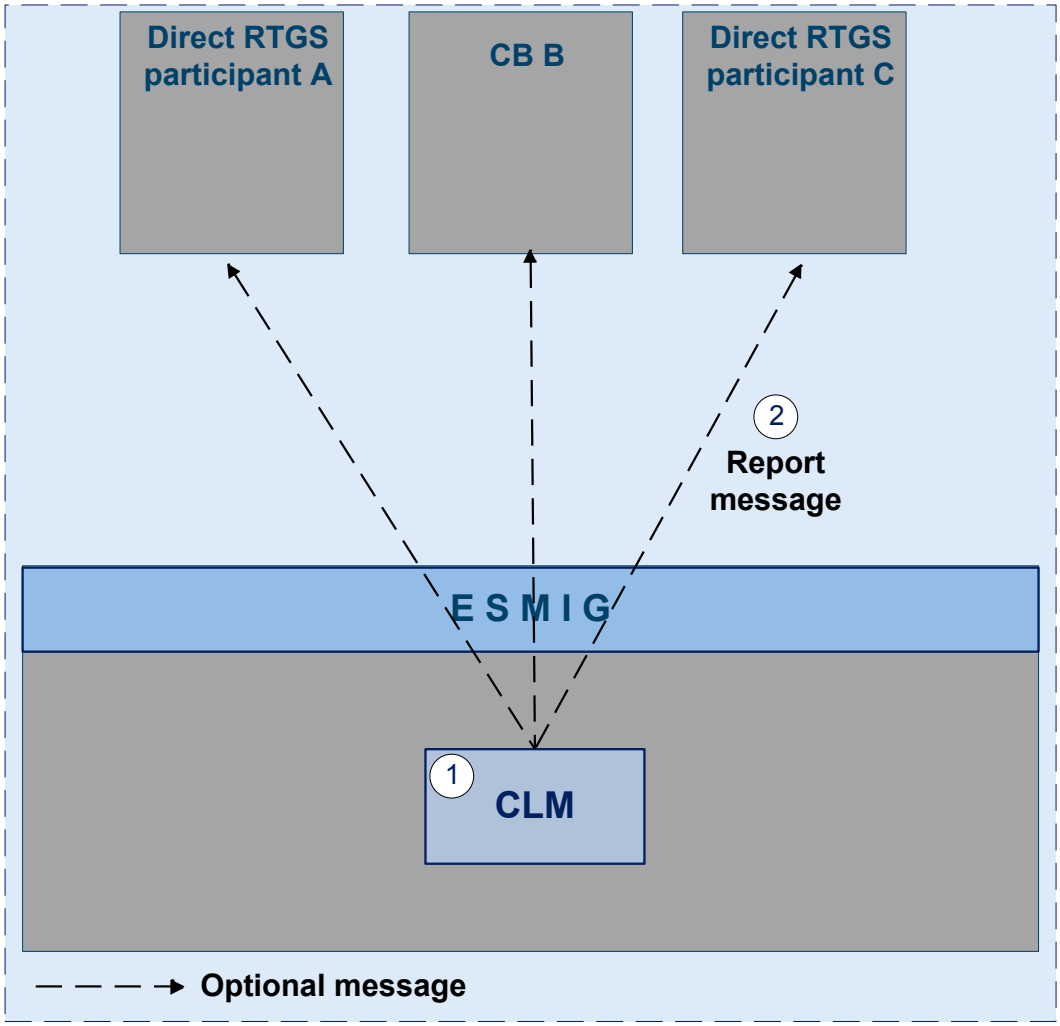

Figure 8 - CLM Report generation process

A created report can be received by one or several receivers. Each party can decide, if it wishes to receive a report directly after its creation or if it wants to query it ad-hoc.

If a recipient wishes to receive a report directly after its creation, this has to be stored in the static data configuration of the report. That means the subscription of a report is independent from the message subscription.

If a recipient does not wish to receive a report directly after its creation but to query it afterwards, this behaviour of the service has to be stored in the CRDM configuration of the report as well. Also this recipient is stored as recipient of a report.

As a general principle the recipient(s) of a report can be different from the concerned party. For information about the setup of report configuration for specific concerned parties and recipients of a report please see UHB chapters related to report configuration setup.

Preconditions for report creation

In order to avoid unnecessary processing and storage the respective service does not create reports automatically. So, to initiate the creation of a report, the requiring receiver has to configure the report in advance. The configuration of the report has to be done via the graphical user interface of CRDM, which is described in the UHB.

This configuration is then stored as static data and is valid until the receiver decides that the report has not to be created anymore or until the “valid to” date stored within the report configuration is reached.

Communication channel

The respective service offers direct communication to applications via XML-messages in application-to-application mode (shortly A2A mode) as well as screen-based online access for connected users in user-to-application mode (U2A mode).

All reports that are offered by the EMIP services are available both in A2A and U2A mode.

In A2A mode the receiver gets the specific report pushed, provided that the push preference for the report is stored for the receiver in static data. Otherwise the report is just stored after generation.

To pull formerly created reports, a report query has to be sent either via the graphical user interface to the respective service or via A2A mode with the specification of the report instance asking for. In case the user has the respective privilege to obtain the requested report, it is sent out to the inquirer. Please see chapter Query management [▸ 44].

Parameter synthesis

The following parameters are specified for the setup of a report.

concerned process	parameter	created and updated by	mandatory/ optional	possible values	hint
Setup of a report	Report type	CRDM actor	Mandatory	Statement of accounts	
Setup of a report	Concerned party	CRDM actor	Mandatory	N/A	
Setup of a report	System entity wide reporting flag	CRDM actor	Mandatory	Yes, No	This flag can only be set to “Yes” for CBs as they are eligible for system entity wide reports.
Setup of a report	Moment of data extraction	CRDM actor	Mandatory	Time event, business event	
Setup of a report	Reporting period	CRDM actor	Mandatory	Complete report, delta report	
Setup of a report	Possible recipient of a report	CRDM actor	Mandatory	N/A	
Setup of a report	Communication channel	CRDM actor	Mandatory	Push mode, pull mode	
Setup of a report	Valid from	CRDM actor	Mandatory	ISO-date	
Setup of a report	Valid to	CRDM actor	Optional	ISO-date	The field „Valid To” is the only field that can be amended after the report configuration has been stored.

Detailed information on the sort of information - report type - statement of accounts

It includes information on one main cash account of a dedicated CLM participant. It is only possible to configure this report as complete report for the end of day. The report is not available during the day and it is not available as delta version.

The report provides information about all items that have been booked to the account and balance information of the current business day. It does not include information from other services, ie there is no report including CLM and RTGS information.

Used messages

- camt.053

6.6.3 Query management

6.6.3.1 Concept

Queries are provided by EMIP services to the system user as a means of satisfying his information needs on demand. He can obtain information on different business items by submitting query requests to EMIP services. These are answered on the basis of the latest data available in EMIP services.

6.6.3.2 Overview

EMIP services provide a range of predefined query types, which the system user can use to request information on business items. All user queries are available for all authorised system users of EMIP services.

They can send queries to EMIP services in A2A mode or in U2A mode. Generally, all queries are processed in real time. Exceptions occur during the maintenance window. Queries sent in A2A mode during the maintenance window are queued and notice of the queued status is given immediately to the requesting system user. The query request is answered after the end of maintenance window. It is not possible to send queries in A2A and U2A mode during the maintenance window.

6.6.3.3 Query management process

Initiating queries

In order to obtain the desired information the system user needs to submit a query to an EMIP service. For the communication with EMIP services in A2A mode all query and response messages are set up as XML messages compliant with the ISO20022 standard. For the communication with EMIP services in U2A mode a graphical user interface based on a standard browser application is provided.

Case: query request on CLM service

Message flow

Process description

Step	Processing in/between	Description
1	CLM participant via ESMIG to CLM	An authorised system user of a CLM participant A sends a query message via ESMIG to the CLM service
2	CLM	CLM message check and validation positive
3	CLM via ESMIG to CLM participant	Query response (positive or negative) via ESMIG to CLM participant A generated by the CLM service

Used messages

- See following table

In general an authorised system user can send each query in A2A mode as well as in U2A mode. However, there are some queries which are only accessible via U2A mode. Query availability in the respective communication mode is shown in the table below.

Related service	Query type	Initiation via GUI (U2A mode)	Initiation via XML message (A2A mode)		
			Query request message	Query response message for operational error	Query response message for business data
CLM	Account statement query	X	-	-	-

The different types of queries in EMIP services are static regarding the set of selection parameters, which can be mandatory, optional or conditional. RTGS and CLM service do not offer dynamic queries.

Preconditions for successful processing of queries

The relevant EMIP service validates the plausibility of the search criteria that were specified by the system user. In addition, the relevant service ensures that the sender of the query is allowed to retrieve the requested information by checking, whether the system user has been granted the necessary privilege.

Only if the system user possesses the necessary privilege to use the initiated query, the requested business information is provided. The privilege has to be granted in advance.

Providing data for queries

If all checks performed by respective service were successful, it extracts the requested business information from the production data. The system user receives the latest available data. If one of the plausibility and privilege checks performed by respective service fails, the system user receives a response indicating the error that has occurred.

Retrieving the query response

In case the extraction of the query data is successful, the respective service sends a query response containing the requested business information back to the requesting system user. In case the extraction of the query data returns a zero result, the requesting system user receives appropriate information. If a retrieval of the query result fails, then an error response is provided to the system user.

If the system user has sent the query via U2A mode, the response is given to the system user in U2A mode. The U2A dialogue is described in more detail in the UHB.

All rights reserved.

If the system user has sent the query via A2A mode, the response is given to the same system user in A2A mode. The respective service does not allow the routing of the query response to a dedicated technical address.

Parameter synthesis

No specific configuration from the system user is needed.

6.6.3.3.1 Common reference data query

The common reference data query can be described as a common message flow that applies to every business scenario.

Upon the sending of a query instructed with an input message, a related query response message or a technical validation error message is returned.

The shared generic message flow is as follows:

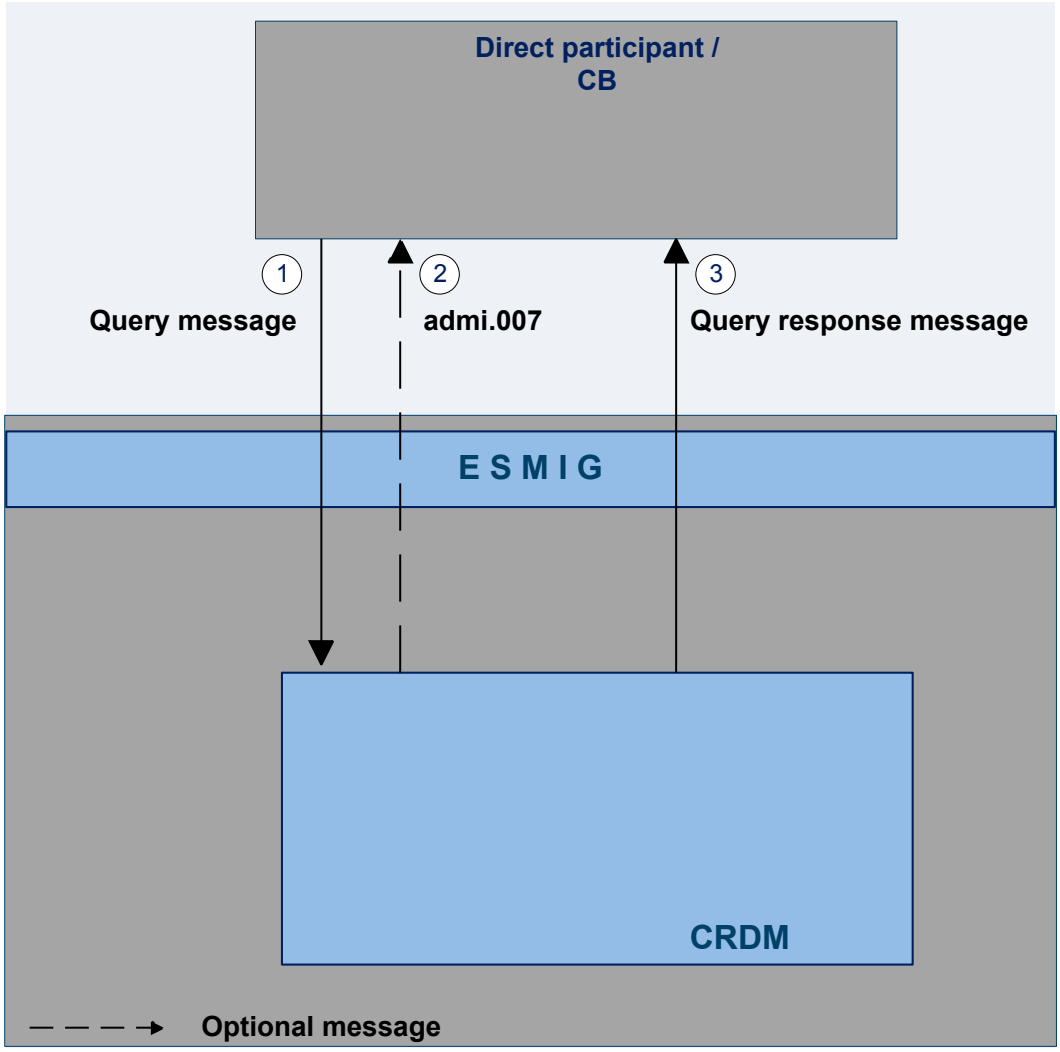

Step	Activity
1	The authorised actor (CLM or RTGS participant or another actor operating on behalf of the MCA or RTGS owner under a contractual agreement) sends the query message to CRDM to retrieve a set of common reference data entity.
2	In case of rejection upon technical validation, an admi.007 receipt acknowledgement is sent by CRDM to the sender of the originating query.
3	CRDM performs the business validation and sends to the authorised actor a query response message to report processing result that is retrieved records or business error found during the validation.

The messages used in the interaction change depending on the query to be performed.

In the following table, for every concerned common reference data entity, the query and query response messages are defined.

CRDM entity	Query message	Query response message
Standing order	camt.069	camt.070

All rights reserved.

7 Data warehouse

8 Billing

All rights reserved.

9 Legal archiving

All rights reserved.

10 Contingency services

11 Catalogue of messages

11.1 Introduction

11.2 General information

11.2.1 Message validation

11.2.2 Communication infrastructure

11.3 List of messages

11.3.1 Account management (acmt)

11.3.2 Administration (admi)

11.3.3 Cash management (camt)

11.3.3.1 ModifyStandingOrder (camt.024)

11.3.3.1.1 Overview and scope of the message

This chapter illustrates the ModifyStandingOrder message.

The ModifyStandingOrder message is sent by an actor authorised to create or modify standing orders for liquidity transfers.

The ModifyStandingOrder message is replied by a camt.025 to return a positive technical response to the sender of the message or to provide detailed information in case of an error.

11.3.3.1.2 Schema

Outline of the schema

The ModifyStandingOrder message is composed of the following message building blocks:

All rights reserved.

MessageHeader

This block is mandatory and provides with the message identification provided by the requesting actor.

StandingOrderIdentification

This block is mandatory and provides with all the key information to identify an existing standing order to be amended or a new standing order to be created.

NewStandingOrderValueSet

This block is mandatory and provide with the pieces of information related to the standing order to be modified or created.

It includes the amount to be transferred, the required account references to perform the transfer, the intended validity period and the execution type in terms of event identification.

References/links

The schema and the related documentation in HTML/PDF format as well as the message examples are provided within the MyStandards repository under the following link:

https://www.swift.com/mystandards/CSLD/camt.024.001.05

11.3.3.2 GetStandingOrder (camt.069)

11.3.3.2.1 Overview and scope of the message

This chapter illustrates the GetStandingOrder message.

The GetStandingOrder message is sent by an authorised actor to retrieve standing order information.

The GetStandingOrder message is replied by a camt.070 to return the retrieved standing order information or to provide detailed information in case of an error (eg no rows retrieved).

11.3.3.2.2 Schema

Outline of the schema

The GetStandingOrder message is composed of the following message building blocks:

MessageHeader

This block is mandatory and provides with the message identification provided by the requesting actor.

RequestType

This block is optional and can be used to specify which kind of query must be performed.

StandingOrderQueryDefinition

This block is mandatory and provides with all the search criteria that must be used to filter standing order records in the CRDM coverage. Possible criteria are account and BIC.

References/links

The schema and the related documentation in HTML/PDF format as well as the message examples are provided within the MyStandards repository under the following link:

https://www.swift.com/mystandards/CSLD/camt.069.001.02

11.3.3.3 ReturnStandingOrder (camt.070)

11.3.3.3.1 Overview and scope of the message

This chapter illustrates the ReturnStandingOrder message.

The ReturnStandingOrder message is sent by CRDM to an authorised actor to provide with requested standing order information.

The ReturnStandingOrder message is sent as a response to a previously sent camt.069.

11.3.3.3.2 Schema

Outline of the schema

The ReturnStandingOrder message is composed of the following message building blocks:

MessageHeader

This block is mandatory and provides with the message identification provided by the requesting actor as well as the original business query message identification and the request type specifying the kind of query that has been performed.

ReportOrError

This block is mandatory and includes either the retrieved records or the error occurred during the query processing (eg no records retrieved).

All rights reserved.

Report

This block is mandatory and provides with all the pieces of information related to the retrieved standing order.

References/links

The schema and the related documentation in HTML/PDF format as well as the message examples are provided within the MyStandards repository under the following link:

https://www.swift.com/mystandards/CSLD/camt.070.001.03

11.3.3.4 DeleteStandingOrder (camt.071)

11.3.3.4.1 Overview and scope of the message

This chapter illustrates the DeleteStandingOrder message.

The DeleteStandingOrder message is sent by an actor authorised to delete standing orders for liquidity transfers.

The DeleteStandingOrder message is replied by a camt.025 to return a positive technical response to the sender of the message or to provide detailed information in case of an error.

11.3.3.4.2 Schema

Outline of the schema

The DeleteStandingOrder message is composed of the following message building blocks:

MessageHeader

This block is mandatory and provides with the message identification provided by the requesting actor.

StandingOrderDetails

This block is mandatory and provides with all the key information to identify an existing standing order to be deleted. Both identification and account identification must be provided.

References/links

The schema and the related documentation in HTML/PDF format as well as the message examples are provided within the MyStandards repository under the following link:

https://www.swift.com/mystandards/CSLD/camt.071.001.02

11.3.4 Headers (head)

11.3.5 Payments clearing and settlement (pacs)

11.3.6 Reference data (reda)

All rights reserved.

12 Index and digital signature

12.1 Index of business rules and error codes

12.2 Index of status value and codes

12.3 Index of instruction references

12.4 Digital signature on business layer

All rights reserved.

13 Additional information for CBs

13.1 Role of CBs in CLM

13.2 Reference data for central banks

13.2.1 Specific data for CBs

13.2.2 Setup of CLM related reference data

13.3 Settlement of payments - specific functions for central banks

13.3.1 Payments linked to monetary policy operations

13.3.2 Cash withdrawals

13.4 Credit line management

13.4.1 Credit line update

13.4.1.1 Overview

13.4.1.2 Credit line update process

13.4.2 Connected payment

13.4.2.1 Overview

A connected payment is a payment initiated by a central bank system or CB operator that triggers a change in the credit line of the CLM participant and an immediate debit/credit of its account to compensate the change in its credit line. Therefor the CLM participant needs a MCA.

All rights reserved.

The processing of connected payments is not possible between the CB general cut-off for the use of standing facilities (ie 18:40) and the start of the provisioning of liquidity for the new business day (ie 19:00), as well as during the maintenance window.

A connected payment leads to the increase or decrease of the CLM participants credit line and at the same time to a corresponding debit or credit of its MCA. (**Note:** the connected payment will be processed on all or nothing basis). Connected payments are not queued and can therefore not be revoked.

13.4.2.2 Connected payment process

The following payment flow illustrates a connected payment with positive validation and settlement on the basis of a pacs.009:

Message flow

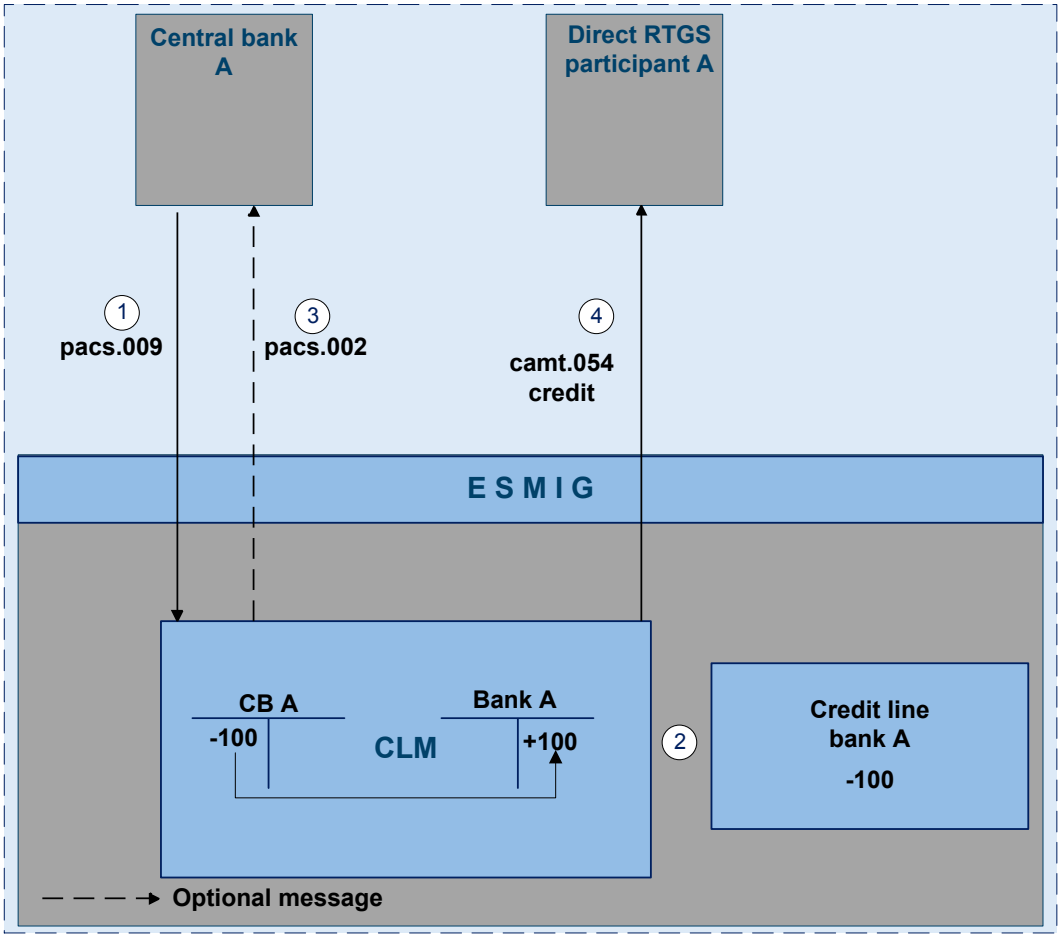

Figure 9 - pacs.009 connected payment

Process description

Step	Processing in/between	Description
1	Central bank via ESMIG to CLM	The central bank sends a pacs.009 including codeword CONPAY via ESMIG to the CLM
2	CLM	CLM check and validation positive Debit CB account and credit MCA participant A simultaneously decrease credit line for participant A (settlement amount must not be equal to credit line change) if business validation positive
3	CLM via ESMIG to central bank	Creation and forwarding of pacs.002 by the CLM (optional) via ESMIG to central bank
4	CLM via ESMIG to CLM participant	Creation and forwarding of camt.054 (credit) by the CLM via ESMIG to CLM participant A

Used messages

- pacs.009
- pacs.002
- camt.054

The following payment flow illustrates a connected payment with positive validation and settlement on the basis of a pacs.010

All rights reserved.

Message flow

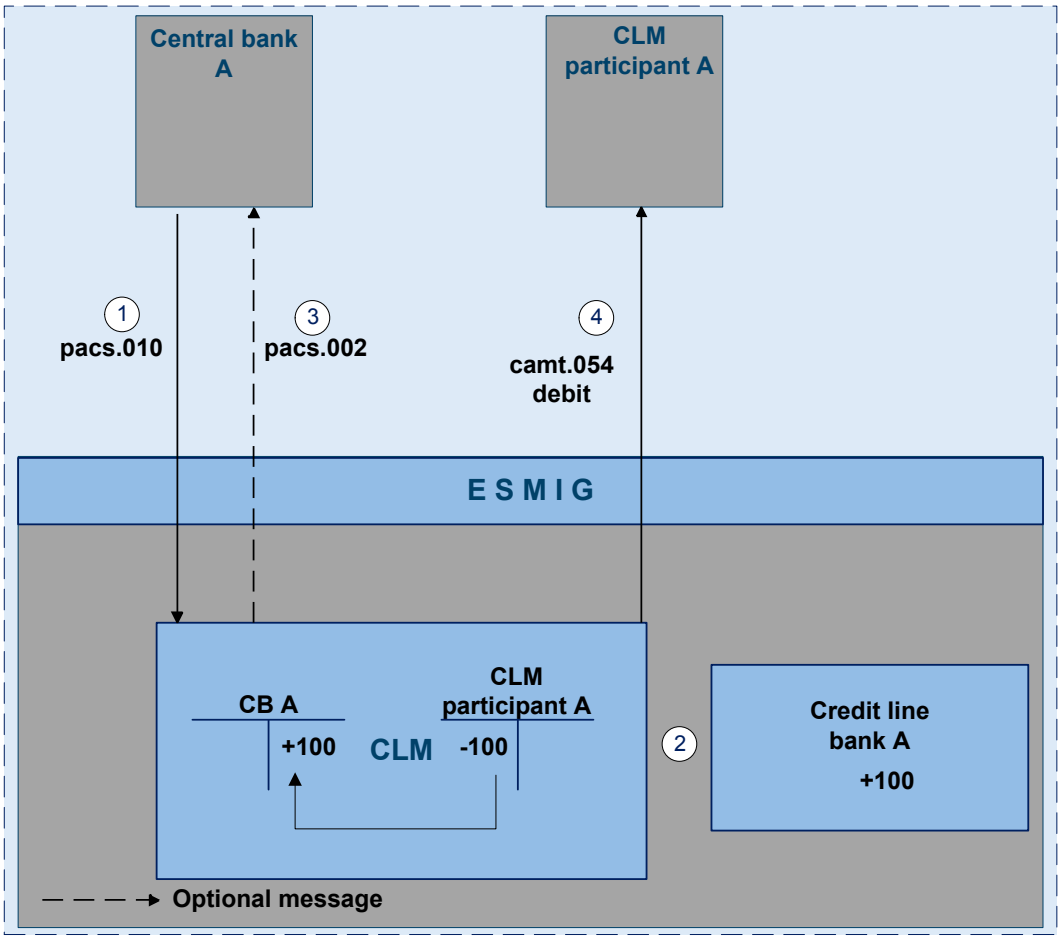

Figure 10 - pacs.010 connected payment

Process description

Step	Processing in/between	Description
1	Central bank via ESMIG to CLM	The central bank sends a pacs.010 with codeword CONPAY and the credit line change via ESMIG to the CLM
2	CLM	CLM check and validation positive Credit CB account and debit MCA participant A simultaneously increase credit line for participant A (settlement amount must not be equal to credit line change) if business validation positive
3	CLM via ESMIG to central bank	Creation and forwarding of pacs.002 by the CLM (optional) via ESMIG to central bank
4	CLM via ESMIG to CLM participant	Creation and forwarding of camt.054 (debit) by the CLM via ESMIG to CLM participant A

Used messages

- pacs.010

- pacs.002
- camt.054

13.5 End-of-day procedures

13.6 Query management - CB specific queries

13.7 Business/liquidity monitoring for CBs

13.8 Reserve management - specific functions for CBs

13.9 Standing facilities - specific functions for CBs

13.10 Data warehouse - specific functions for CBs

13.11 Billing - specific functions for CBs

13.12 Contingency services - specific functions for CBs

13.13 Specific requirements for CBs of "out" countries

All rights reserved.

14 Glossary

All rights reserved.